sportworks

Interbay Single bike rack

Technical Drawing

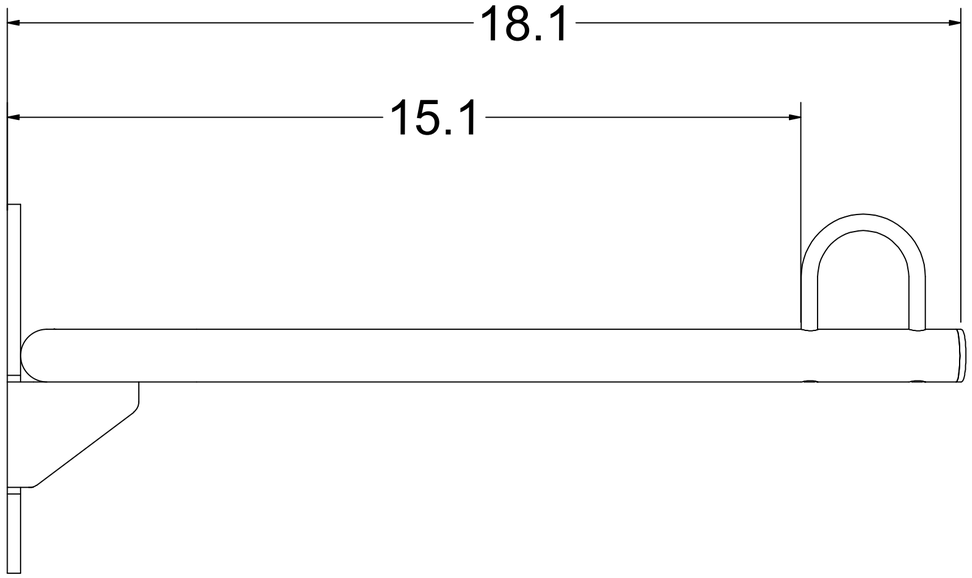

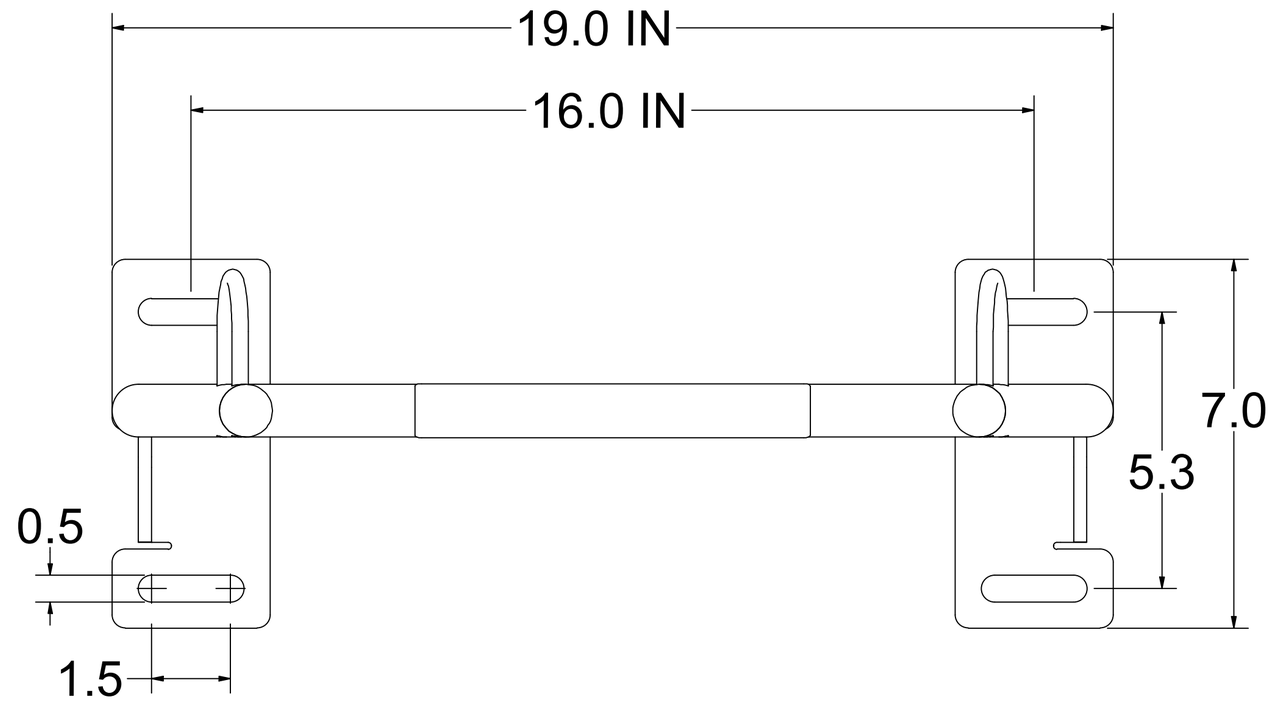

Sportworks Northwest Inc. | 15540 Wood Red Rd NE, Bldg A-200 | Woodinville, WA 98072 | www.sportworks.com
Contact: Tel: 425-483-7000 | Fax: 425-488-9001 | salesandsupport@sportworks.com

All dimensions in inches. All dimensions and specifications nominal. Specifications are subject to change without notice. Copyright © 2011 Sportworks Northwest, Inc. All rights reserved.

sportworks

Interbay Double bike rack

Technical Drawing

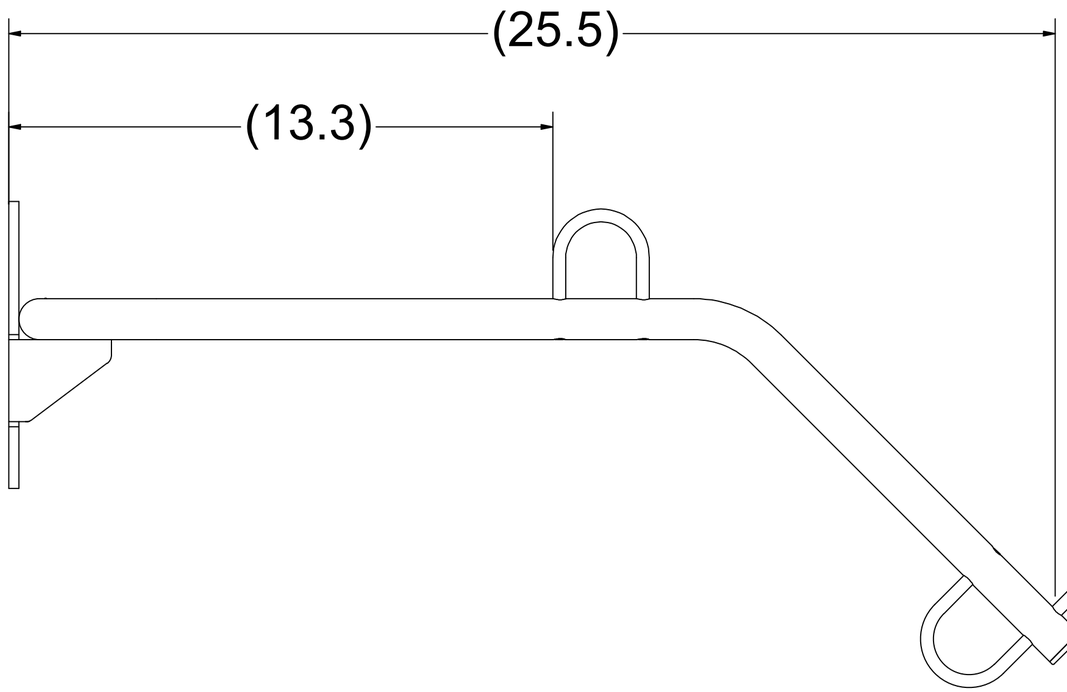

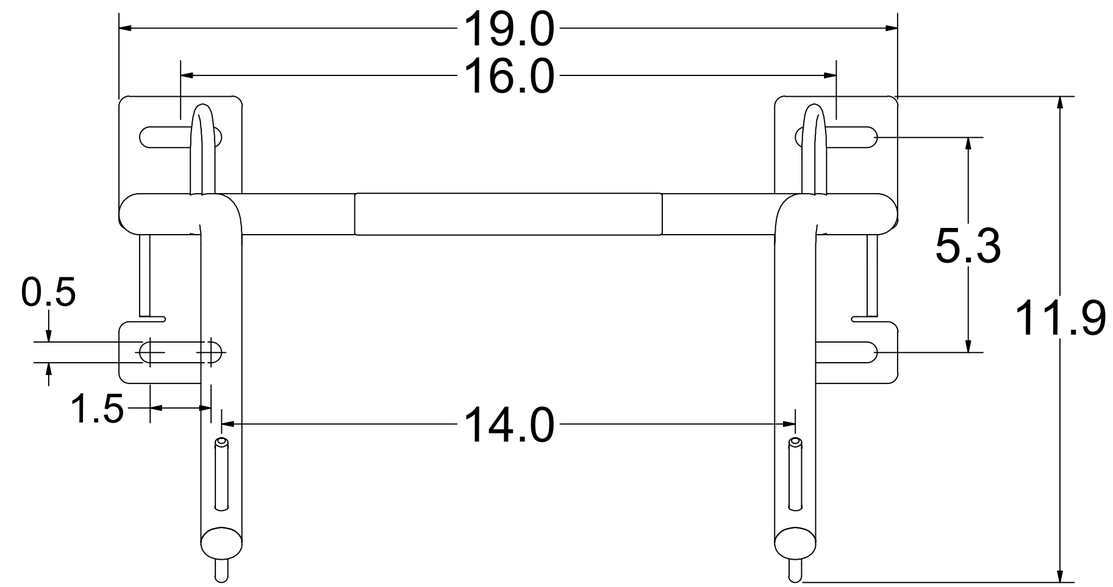

Sportworks Northwest Inc. | 15540 Wood Red Rd NE, Bldg A-200 | Woodinville, WA 98072 | www.sportworks.com
Contact: Tel: 425-483-7000 | Fax: 425-488-9001 | salesandsupport@sportworks.com
All dimensions in inches. All dimensions and specifications nominal. Specifications are subject to change without notice. Copyright © 2011 Sportworks Northwest, Inc. All rights reserved.